DEKS INDUSTRIES
5/841 Mountain Highway
Bayswater
Victoria 3153
www.deks.com.au

Technical Documents

1: Drawing 5161

2: Drawing 5163

Follow Us On

ITEM NO.	PART NUMBER	DESCRIPTION	QTY.
1	5161-1	SLUICE VALVE KEY	1
2	5161-2	SLUICE VALVE HANDLE	1

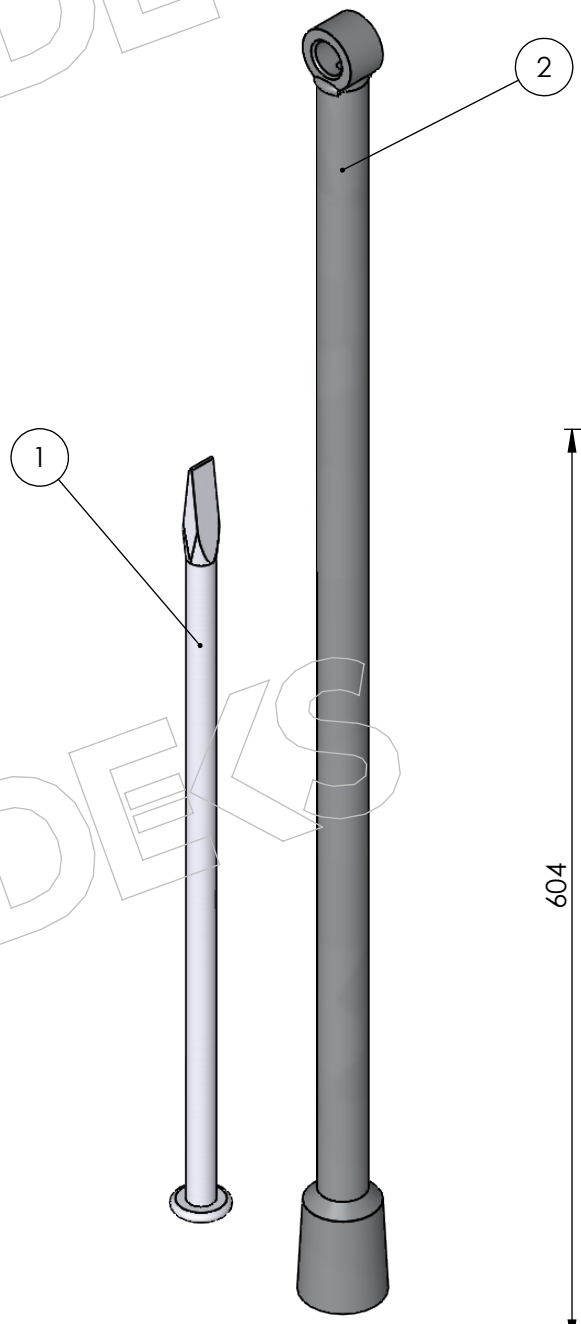

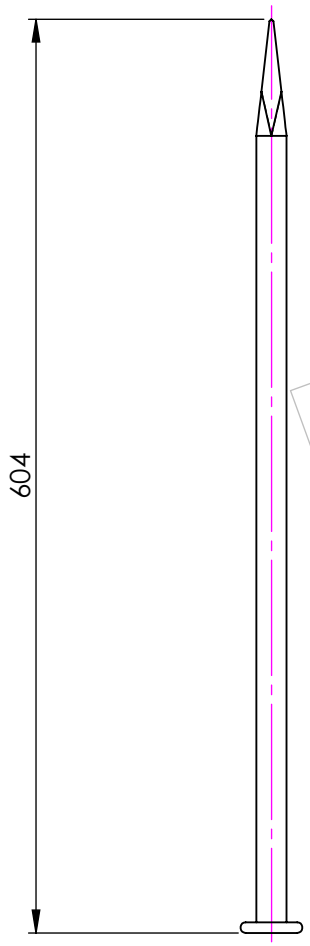

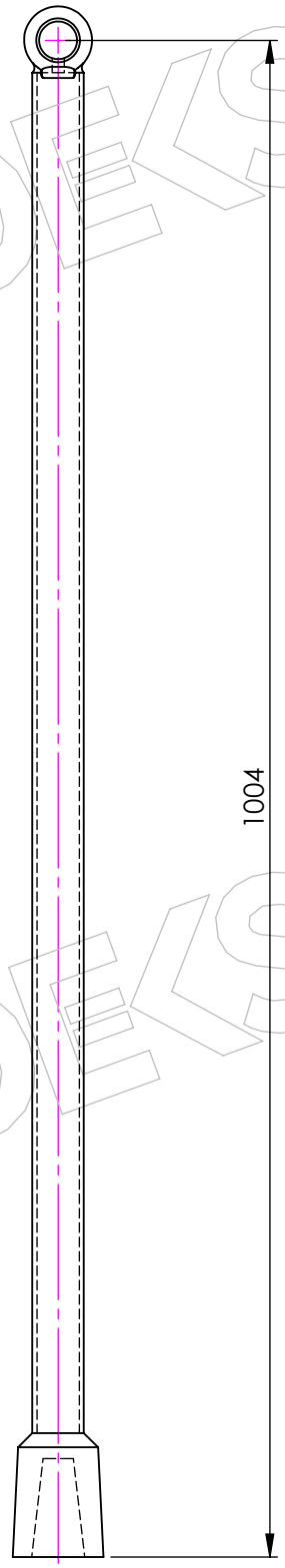

PART NUMBER	DISPLAY NAME
5161	Sluice valve key & handle

DEKS

PART NO	DISPLAY NAME	MATERIAL
5163	VALVE ACTUATING KEY 300mm EXTENSION	CAST IRON